INSTALLATION INSTRUCTIONS

AKASISON

ROOF OUTLETS XL 63

akasison

PRACTICAL BY PRINCIPLE.

AKASISON ROOF OUTLETS XL 63

ROOF OUTLET 74 06 30

1.

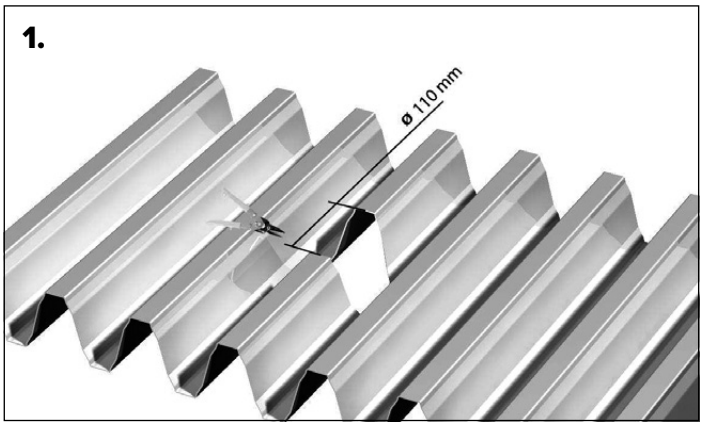

2.

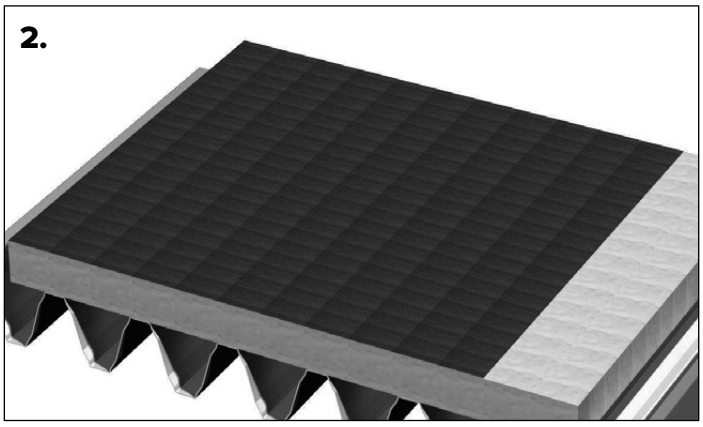

3.

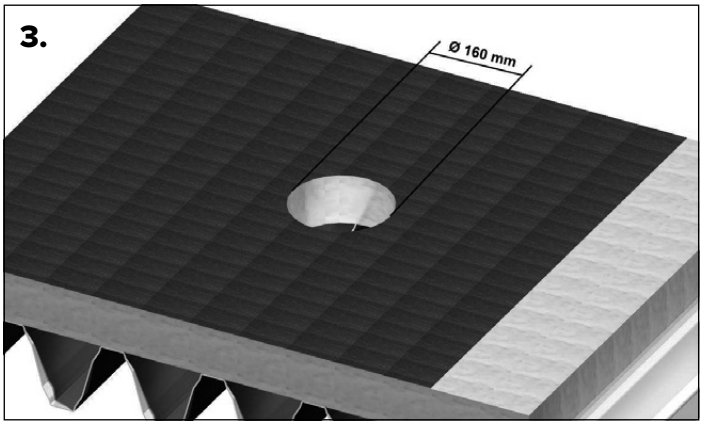

4.

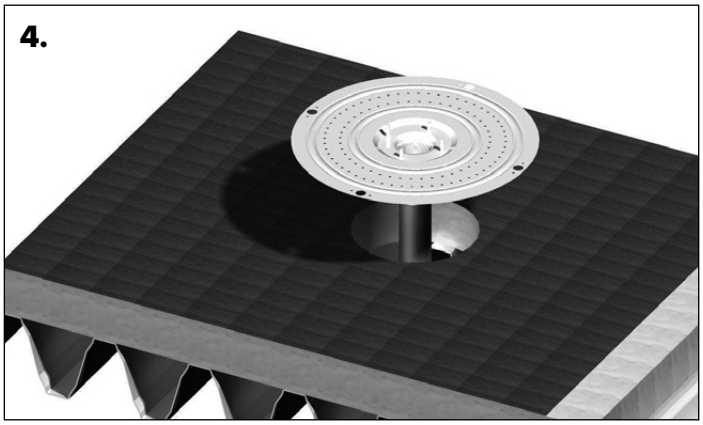

5.

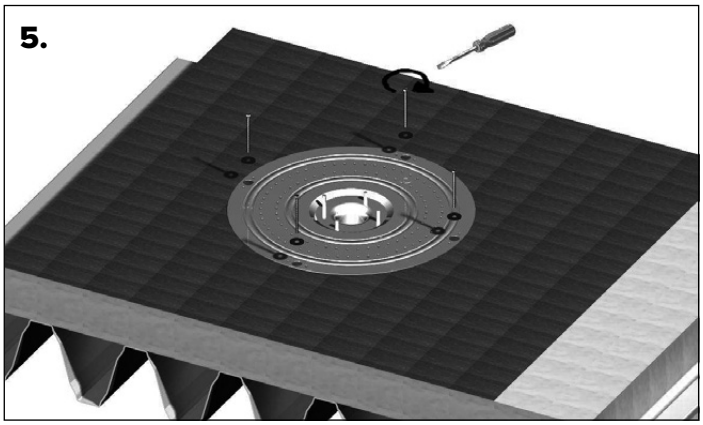

6.

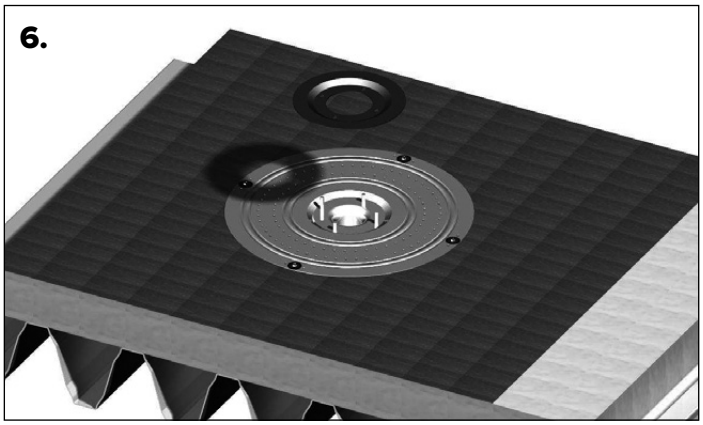

7.

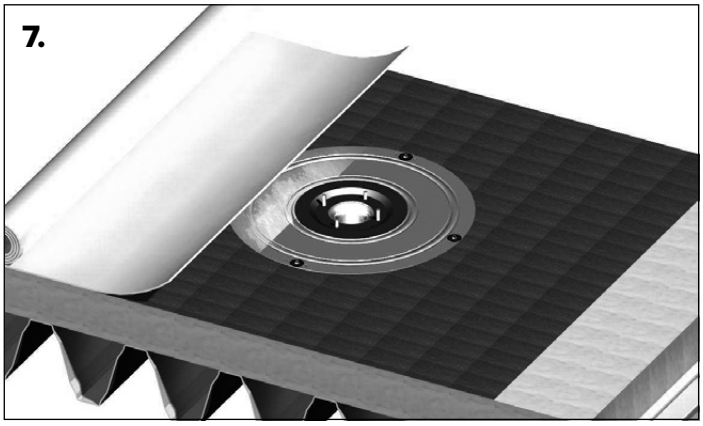

8.

AKASISON ROOF OUTLETS XL 63

9.

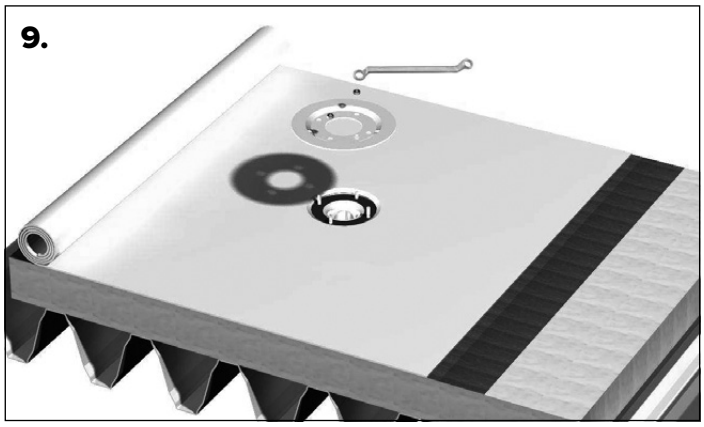

10.

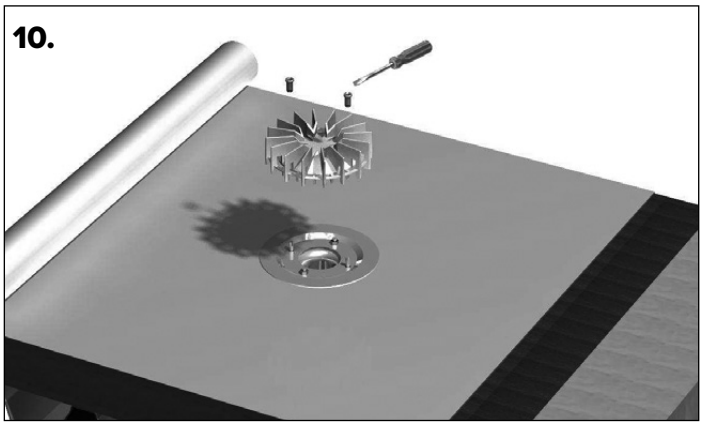

11.

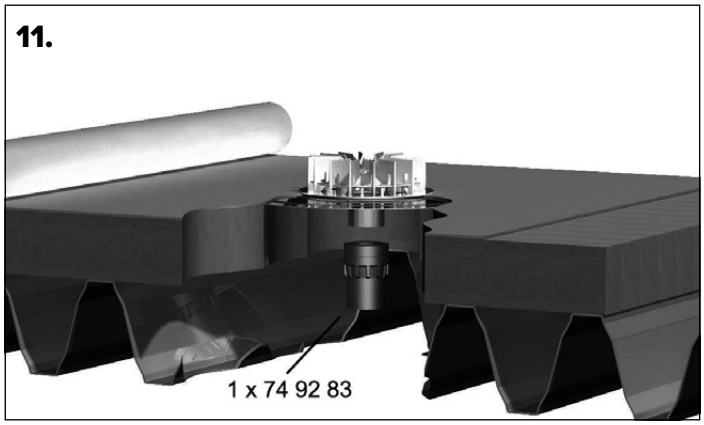

AKASISON ROOF OUTLETS XL 63

ROOF OUTLET 74 06 32

1.

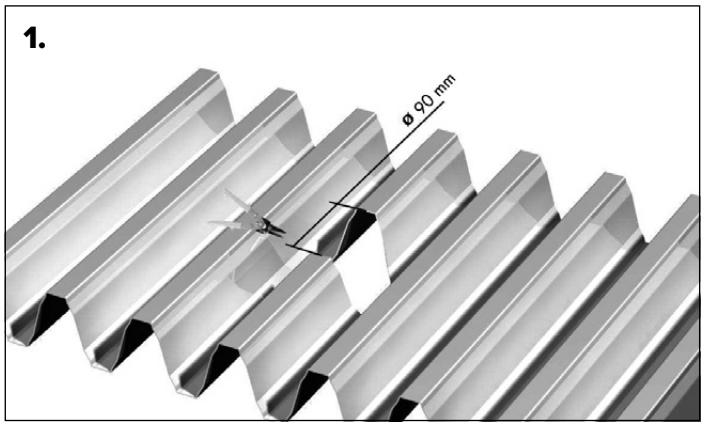

2.

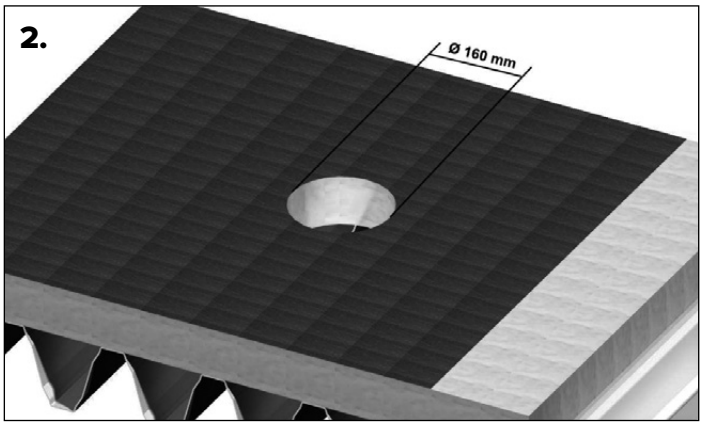

3.

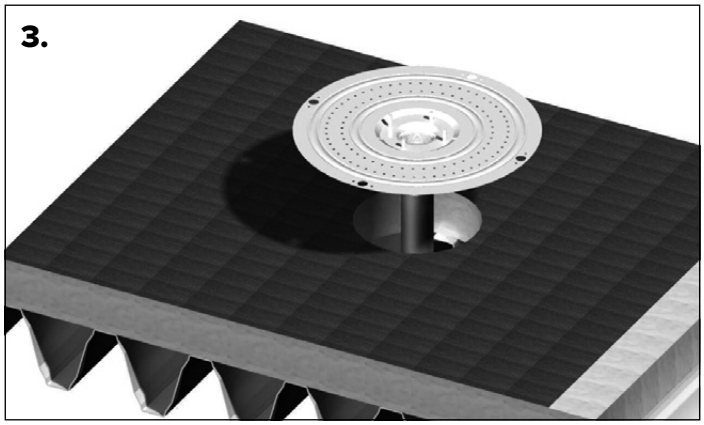

4.

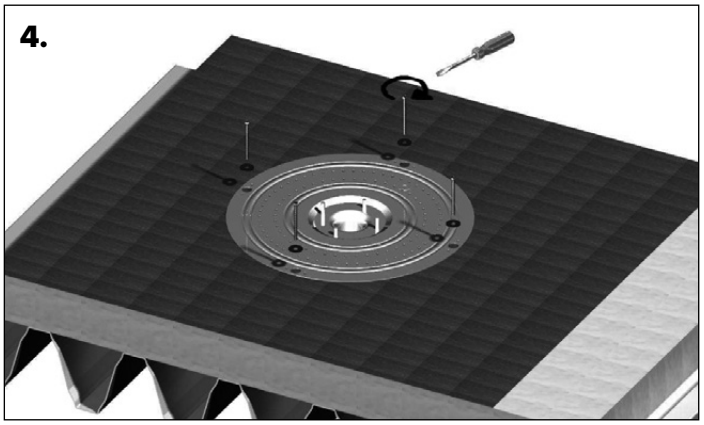

5.

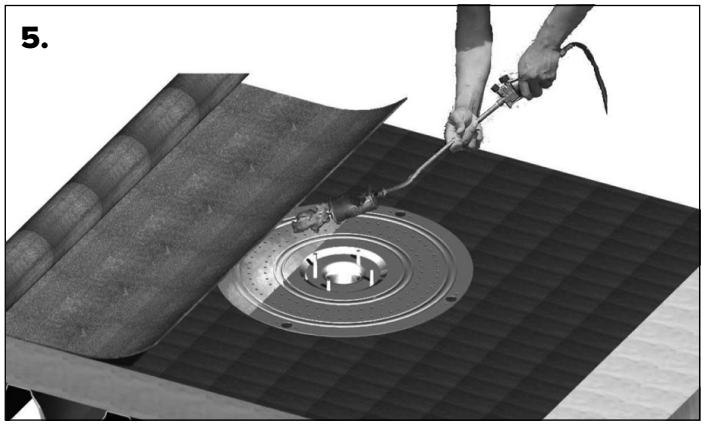

6.

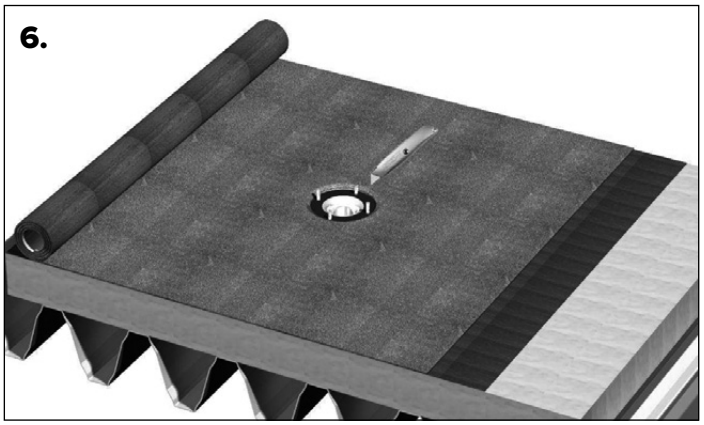

7.

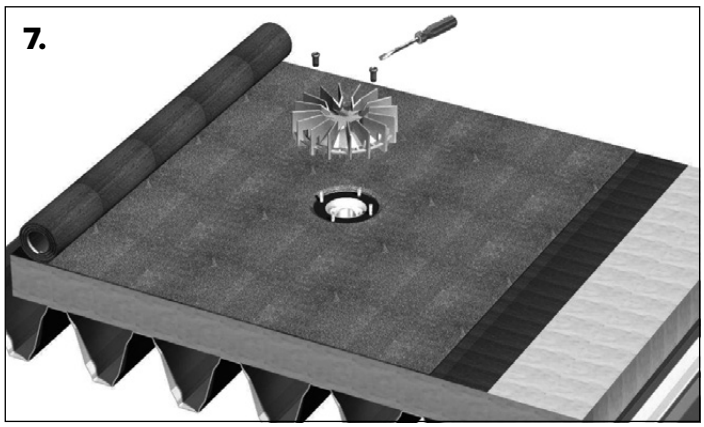

8.

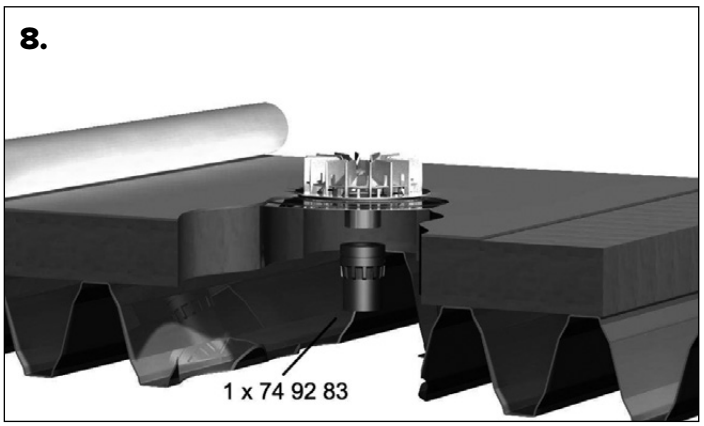

INSTALLATION INSTRUCTIONS

AKASISON ROOF OUTLETS XL 63

HEATING 74 06 01

akatherm

Akatherm BV
Industrieterrein 11
P.O. Box 7149
5980 AC Panningen
The Netherlands

Tel +31 (0)77 30 88 650
Fax +31 (0)77 30 75 232

info@akasison.com
www.akasison.com

02/16/320

an Aliaxis company