DATASHEET

AKASISON XL75 FPO HEATED

ARTICLE CODE: 747517

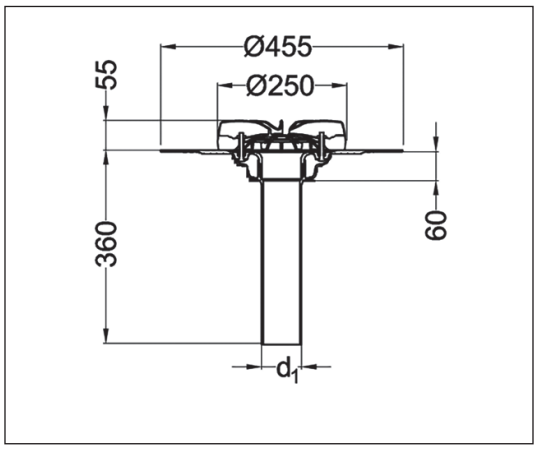

According to EN 1253

Roof outlet for FPO roof membranes for Akasison siphonic roof drainage systems.

Delivery includes:	Akasison air baffle with integrated leaf guard (UV-stabilized)
	Roof outlet with integrated PP flange
	Connector to pipe system.
	Self-regulating 230V heating element, cable length 1m
Application:	Cold roof (metal/concrete)
	Warm roof (metal/concrete)
Insulation thickness:	Roof insulation between 60 and 330 mm
Connection pipe system:	Electrofusion coupler Art. Nr. 410795.
	Drilling core size: Ø ☐ 80 mm.
Outlet:	d1 = 75 mm.
Performance:	1-17,7 l/s.
Material:	HDPE, PP, ASA (UV-stabilized).
Weight:	xxxxx kg

Capacity according to EN 1253

Water level	5 mm	15 mm	25 mm	35 mm	45 mm	55 mm	65 mm	75 mm
Capacity [l/s]	0,25	2,00	5,70	11,50	17,40	17,70	17,70	17,70

Packaging:	1 piece
Discount group:	AD

Date: 05.2020

20/05/010